DRM-IMBUS-69

DRM-IMBUS-69

DRM-IMBUS-69 (Hex Socket Screw Cover Cap) is a decorative and protective plastic cap designed to conceal hex socket (Allen) screws according to the specified technical dimensions.

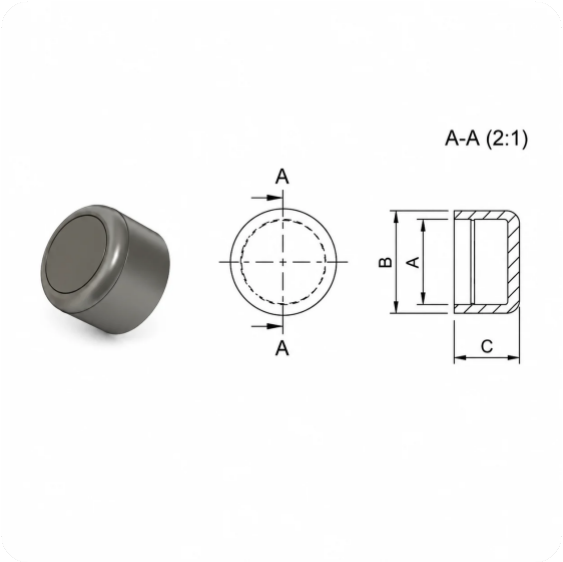

DISCLAIMER

The information contained in this Technical Data Sheet is based on laboratory testing, practical experience and current knowledge at the time of publication. The values provided are intended as general guidance and may vary depending on application methods, operating conditions, substrates, environmental factors and production processes.

Since the conditions of use and application are beyond our control, customers are responsible for determining the suitability of the product for their specific application through their own testing and evaluation. The information provided does not constitute a warranty or guarantee of product performance in any particular application.

Product specifications, formulations and technical data may be modified without prior notice as part of continuous product development and improvement programs. The latest version of this document supersedes all previous editions.

For additional technical information, application recommendations or specific processing conditions, please contact our technical service department.